BOLERO XL

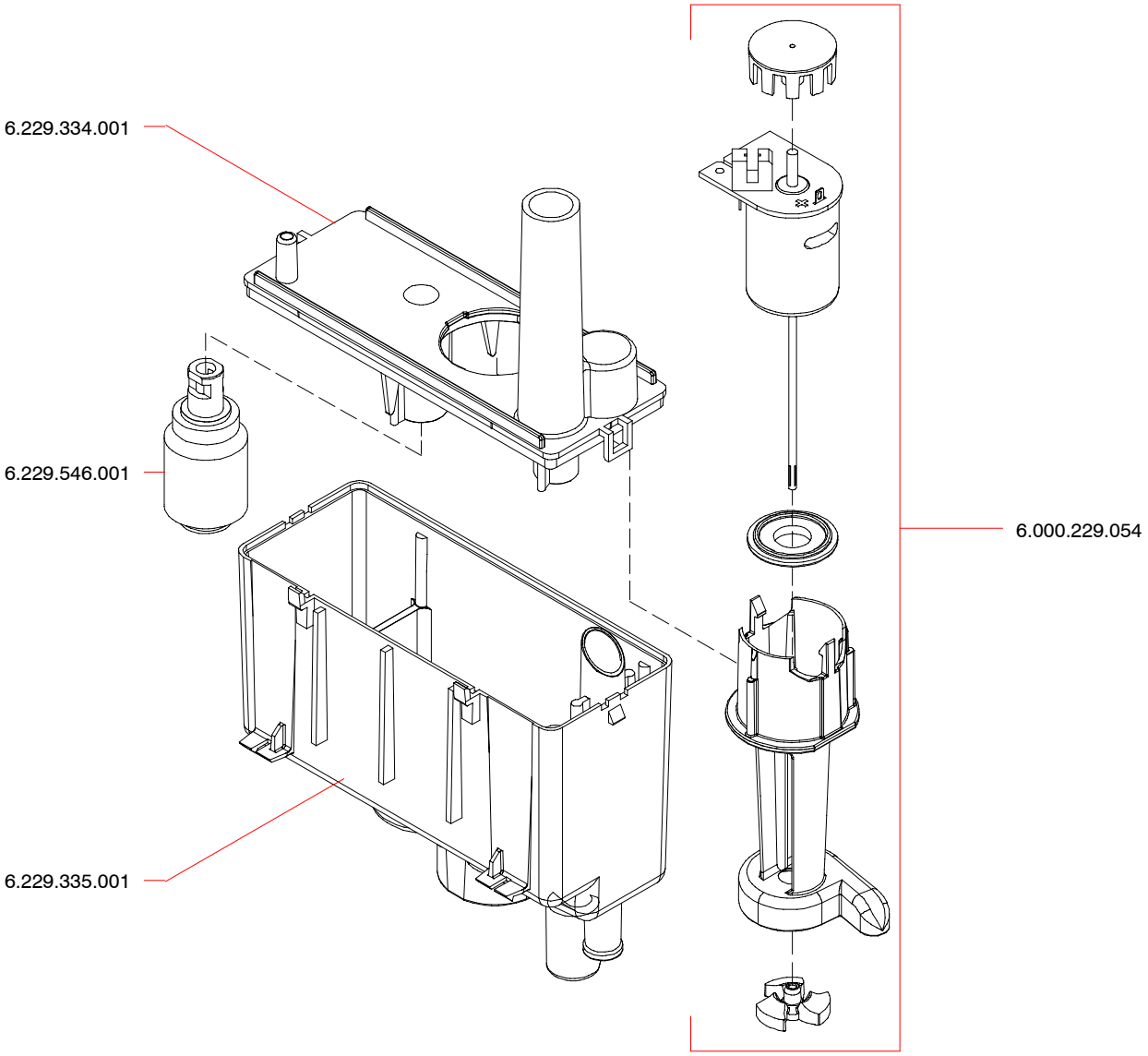

©Copyright Bravilor Bonamat B.V.